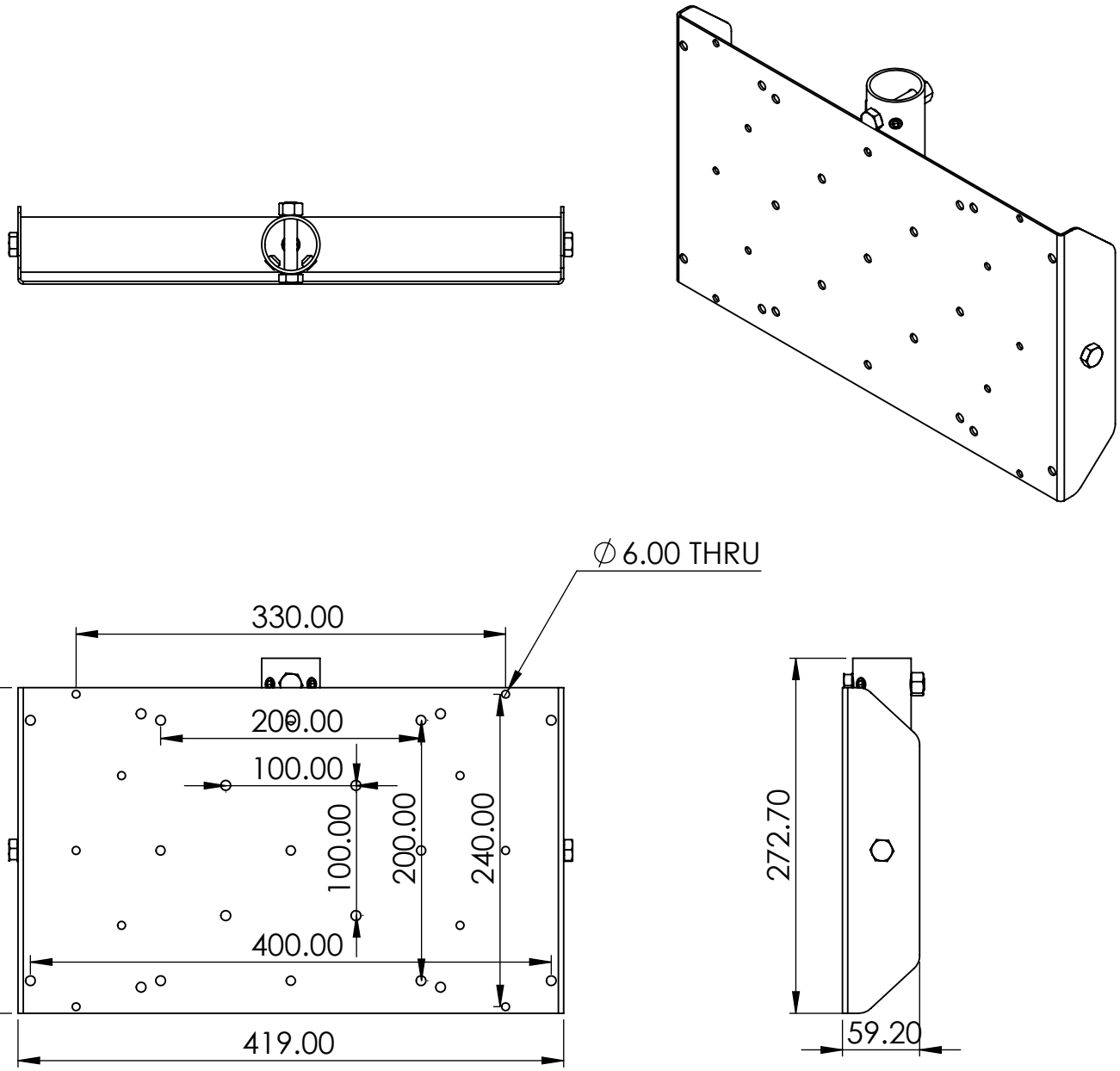

Gardner Engineering Limited

Notes:

All Tolerances +/- 0.5% unless otherwise Statated

All Measurements are Raw Materials Only and allowances are needed for Welding Tracks & any additional coatings such as Powder Coating / Spray Paints Etc

Part Number:	VESA-PA1-38-400
Description:	38mm Single TFT Pole Mount VESA 100, 200 & 400 (2 Hole)
Date:	05 March 2024
Sheet Scale: 1:5	Sheet 1 Of 1

Gardner Engineering Limited (GE) makes no representation or warranties, express or implied, with respect to the reuse of the data provided herewith, regardless of its format or the means of its transmission. We make every effort to ensure accurate information, however there is no guarantee or representation to the user as to the accuracy, currency, suitability or reliability of this data. The user assumes all risks associated with its use. GE assumes no responsibility for actual or consequential damage incurred as a result of any user's reliance on this data